# Polarman

## Reach–ins Unit Down

- HC refrigerent.
- CFC free refrigerant & form.
- Electronic thermostat, digital LED temperature display.
- Self-closing door.
- Magnetic gasket can be replaced very easy.
- Heating element conceal in door frame to avoid any condensation.

ECO

R290 refrigerant

PLM-27R/F

PLM-54R/F

PLM-81R/FDV

Intertek | Intertek

| MODEL | EXTERNAL DIMENSION inch | V/Hz/Ph | STORAGE CAPACITY Cu–ft | SHELF CAPACITY Sq–ft | TEMPERATURE | NEMA PLUG |
|---|---|---|---|---|---|---|
| PLM-27R | 26.8x32.7x82.3 | 115V/60Hz/1 | 23 | 14 | 33°F~41°F | 5-15P |
| PLM-27F | 26.8x32.7x82.3 | 115V/60Hz/1 | 23 | 14 | -10°F | 5-15P |
| PLM-54R | 53.9x32.7x82.3 | 115V/60Hz/1 | 49 | 28.1 | 33°F~41°F | 5-15P |
| PLM-54F | 53.9x32.7x82.3 | 115V/60Hz/1 | 49 | 28.1 | -10°F | 5-15P |
| PLM-81R | 81.0x32.7x82.3 | 115V/60Hz/1 | 72 | 42.1 | 33°F~41°F | 5-15P |
| PLM-81FDV | 81.0x32.7x82.3 | 115-230V/60Hz/1 | 72 | 42.1 | -10°F | L14-20P |

Certified to ANSI/NSF Standard 7

Polarman

• PLM-27R/CM-27F

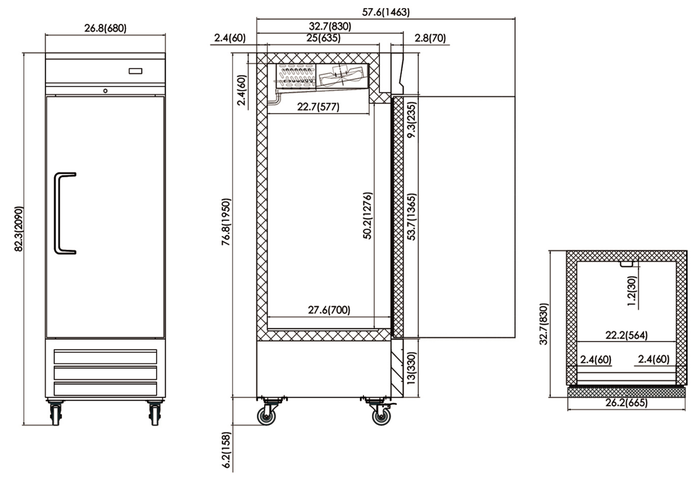


• PLM-54R/CM-54F

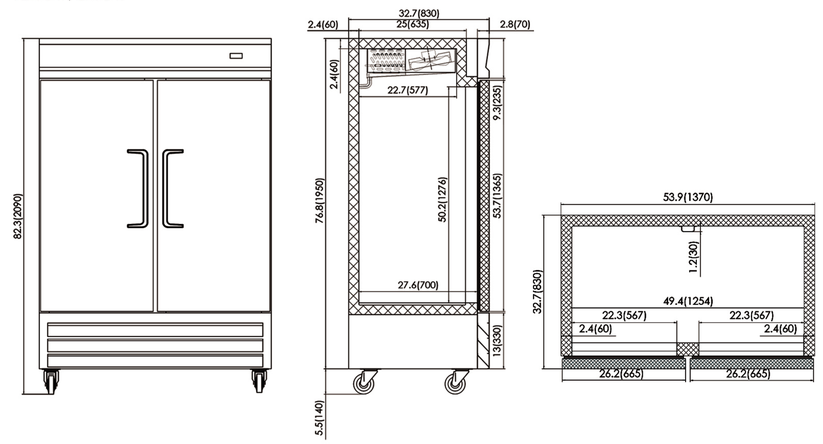

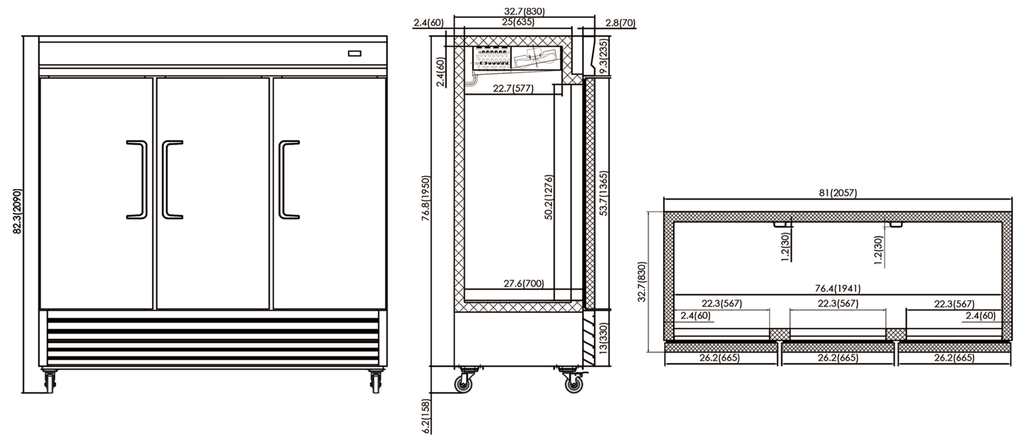
• PLM-81R/CM-81FDV